Chlorine, Free

DOC316.53.01498

USEPA DPD Method[1] **Method 10260**

0.04 to 4.60 mg/L as Cl_2 **Chemkey® Reagents**

Scope and application: For drinking water. This product has not been evaluated to test for chlorine and chloramines in medical applications in the United States.

[1] Hach Method 10260 is USEPA approved for the determination of free and total chlorine in drinking water, Federal Register Volume 79, Number 118 (Thursday, June 19, 2014).

Test preparation

Before starting

Analyze the samples immediately. The samples cannot be preserved for later analysis.
Open the sample valve or spigot and let the water flow for at least 5 minutes.
Use a new Chemkey for each measurement.
Make sure the sample is colorless and the turbidity value is less than 20 NTU.
Do not touch the Chemkey with hands.
Do not move the Chemkey after it is installed in the meter.
The display shows a progress bar with the time that remains until the measurement is completed. Different parameters have different reaction times.
The meter automatically identifies the type of Chemkey(s) that is installed.
Refer to the meter documentation for additional information.
Review the Safety Data Sheets (MSDS/SDS) for the chemicals that are used. Use the recommended personal protective equipment.
The Chemkeys are articles and have no MSDS/SDS.
Dispose of reacted solutions according to local, state and federal regulations. Refer to the Safety Data Sheets for disposal information for unused reagents. Refer to the environmental, health and safety staff for your facility and/or local regulatory agencies for further disposal information.

Items to collect

Description	Quantity
Free Chlorine Chemkey	1

Refer to Consumables and replacement items on page 4 for order information.

Test procedure

1. Peel back the packaging to show the end of the Chemkey. Do not touch the Chemkey with hands.

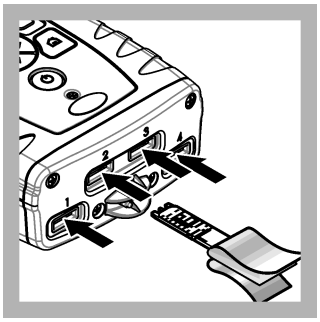

2. Put the Chemkey slowly in one movement into any slot. Carefully remove the packaging from the Chemkey.

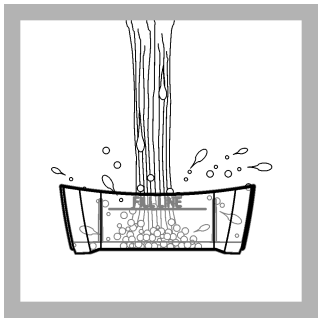

3. Rinse the sample cup with the sample.

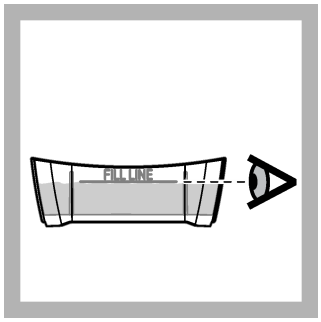

4. Fill the sample cup to the fill-line with sample.

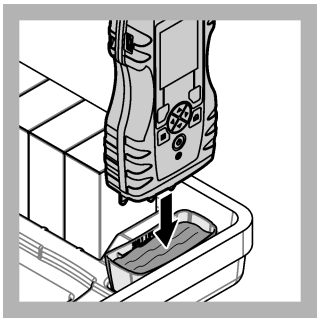

5. Put the meter into the sample cup.

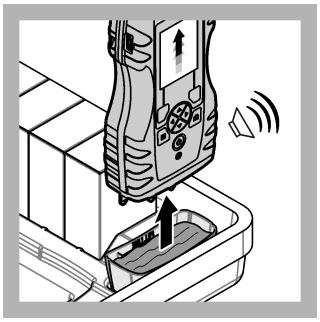

6. Wait for the sound alert and/or the meter removal animation (within 1 to 2 seconds), then immediately remove the meter from the sample cup.

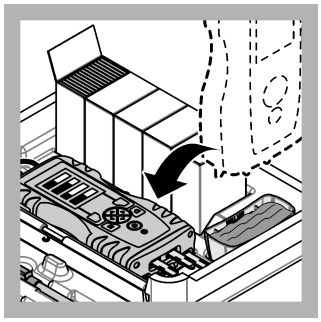

7. Put the meter back into the case. Wait for the measurement to complete.

Interferences

The substances that are shown in Table 1 interfere in the free chlorine determination at the given concentrations. The interference from some substances can be prevented by pretreatment of the sample as shown in the table. If the sample is pretreated, use the pretreated sample only for the applicable parameter. Do not use a pretreated sample to measure multiple parameters.

Table 2 shows the substances that were tested and do not interfere at or below the levels that are shown.

Table 1 Interfering substances

Interfering substance	Interference level
Acidity	More than 150 mg/L $CaCO_3$. The full color may not develop or the color may fade instantly. Adjust to pH 6 to 7 with 1 N Sodium Hydroxide. Measure the amount to add on a separate sample aliquot, then add the same amount to the sample that is examined. Correct the test result for the dilution from the volume addition.
Alkalinity	More than 250 mg/L $CaCO_3$. The full color may not develop or the color may fade instantly. Adjust to pH 6–7 with 1 N Sulfuric Acid. Measure the amount to add on a separate sample aliquot, then add the same amount to the sample that is tested. Correct the test result for the dilution from the volume addition.
Bromine, Br_2	Positive interference at all levels
Chlorine Dioxide, ClO_2	Positive interference at all levels

Table 1 Interfering substances (continued)

Interfering substance	Interference level
Chloramines, organic	May interfere
Iodine, I_2	Positive interference at all levels
Manganese, Oxidized (Mn^{4+}, Mn^{7+}) or Chromium, Oxidized (Cr^{6+})	Pre-treat the sample as follows: **1.** Adjust the sample pH to 6–7. **2.** Add 30 drops of Potassium Iodide (30-g/L) to 100 mL of sample (adjust for the sample cup volume). **3.** Mix and wait 1 minute. **4.** Add 30 drops of Sodium Arsenite (5-g/L) and mix. **5.** Use the test procedure to measure the concentration of the treated sample. **6.** Subtract this result from the result without the treatment to get the correct chlorine concentration.
Ozone	Positive interference at all levels
Peroxides	May interfere
Highly buffered samples or extreme sample pH	Can prevent the correct pH adjustment of the sample by the Chemkey. Sample pre-treatment may be necessary. Adjust to pH 6–7 with acid (Sulfuric Acid, 1.000 N) or base (Sodium Hydroxide, 1.00 N).

Table 2 Non-interfering substances

Substance	Maximum level tested	Substance	Maximum level tested
Alkalinity (as $CaCO_3$)	250 mg/L	Magnesium (Mg^{2+})	1000 mg/L
Aluminum (Al^{3+})	0.2 mg/L	Manganese (Mn^{2+})	0.2 mg/L
Calcium (Ca^{2+})	1000 mg/L	Nitrate (NO_3^-–N)	10.0 mg/L
Chloride (Cl^-)	1200 mg/L	Sulfate (SO_4^{2-})	500 mg/L
Copper (Cu^{2+})	1.0 mg/L	Zinc (Zn^{2+})	5.0 mg/L
Iron (Fe^{2+})	1.0 mg/L		

Accuracy check

Standard solution method

Use the standard solution method to validate the test procedure, the reagents and the instrument.

Items to collect:

- 50–75-mg/L Chlorine Standard Solution (use mg/L on label)
- 200-mL volumetric flask, Class A
- Pipet, adjustable volume, 1.0–5.0 mL and pipet tip
- Deionized water

1. Prepare a 2-mg/L (approximate) chlorine standard solution as follows:
   a. Use a pipet to add the calculated volume of the chlorine standard solution into the volumetric flask. Use the instructions that come with the standard solution ampules to determine the calculated volume.
   b. Dilute to the mark with deionized water. Mix well. Prepare this solution daily.
2. Use the test procedure to measure the concentration of the prepared standard solution.
3. Compare the expected result to the actual result.

   Note: *The factory calibration can be adjusted slightly with the standard adjust option so that the instrument shows the expected value of the standard solution. The adjusted calibration is then*

used for all test results. This adjustment can increase the test accuracy when there are small variations in the reagents or instruments.

Method performance

The method performance data that follows was derived from laboratory tests during ideal test conditions. Users can get different results under different test conditions.

Method detection limit (MDL)[1] = 0.04 mg/L

Minimum quantifiable limit (MQL)[2] = 0.12 mg/L

Standard	Precision (95% confidence interval)	Sensitivity Concentration change per 0.010 Abs change
2.05 mg/L Cl_2	2.02 to 2.08 mg/L Cl_2	0.04 mg/L Cl_2

Summary of method

Chlorine in the sample as hypochlorous acid or hypochlorite ion (free chlorine or free available chlorine) immediately reacts with DPD (N,N-diethyl-p-phenylenediamine) indicator to form a pink color that is proportional to the chlorine concentration.

Consumables and replacement items

Description	Quantity/Test	Unit	Item no.
Free Chlorine Chemkey®	1	25/pkg	9429000
Sample cup	1	each	9418100

Recommended standards

Description	Unit	Item no.
Chlorine Standard Solution, 10-mL Voluette® Ampule, 50-75 mg/L	16/pkg	1426810

Optional reagents and apparatus

Description	Unit	Item no.
Ampule Breaker, 10-mL Voluette® Ampules	each	2196800
Flask, volumetric, Class A, 200 mL	each	1457445
Pipet, adjustable volume, 1.0–5.0 mL	each	BBP065
Pipet tips, for 1.0–5.0 mL pipet	75/pkg	BBP068
Water, deionized	4 L	27256

[1] The U.S. Environmental Protection Agency (USEPA) method detection limit (MDL) is described as the minimum concentration of a substance that can be measured and reported with 99-percent confidence that the analyte concentration is greater than zero.

[2] The minimum concentration of an analyte where positive identification and quantitative measurement can be achieved using a specific method. MQL is usually defined as 3 to 5 times the MDL.

FOR TECHNICAL ASSISTANCE, PRICE INFORMATION AND ORDERING:
In the U.S.A. – **Call toll-free 800-227-4224**
Outside the U.S.A. – **Contact the HACH office or distributor serving you.**
On the Worldwide Web – **www.hach.com**; E-mail – **techhelp@hach.com**

HACH COMPANY
WORLD HEADQUARTERS
Telephone: (970) 669-3050
FAX: (970) 669-2932

© Hach Company/Hach Lange GmbH, 2015–2016. All rights reserved.

05/2016, Edition 4